FOREMOST®

ASHBURN
36″ VANITY

SPECIFICATIONS
- Grey or white finish
- 2 Slow close doors
- 3 Slow close drawers on right side
- Concealed adjustable hinges
- Satin nickel hardware
- Assembled vanity
- Virtual combo top options available on homedepot.ca

OVERALL DIMENSIONS
36″ W x 21⅝″ D x 34″ H
914mm W x 549mm D x 864mm H

SHIPPING
Cube 23.5
GW 99.4 lbs

ITEMS TO BE SPECIFIED
GREY
☐ **ASGRA3621DR**
UPC: 721015371762
WHITE
☐ **ASWA3621DR**
UPC: 721015372448

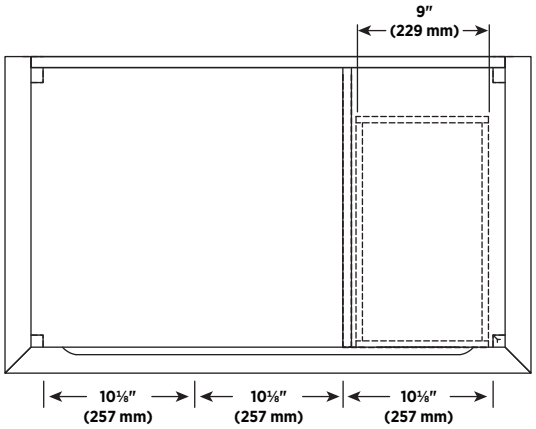

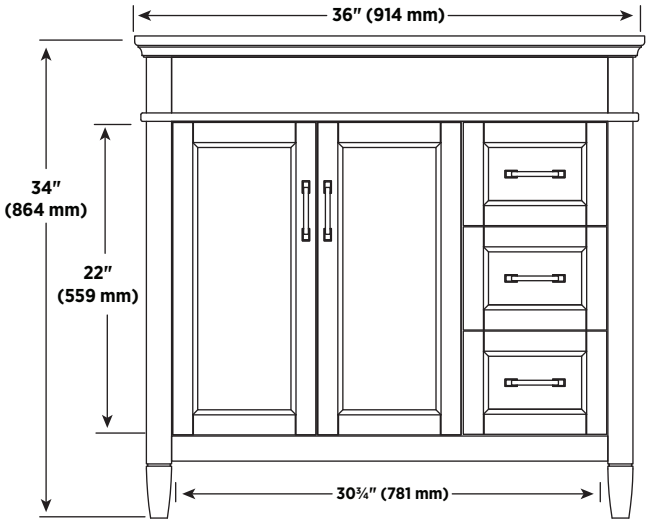

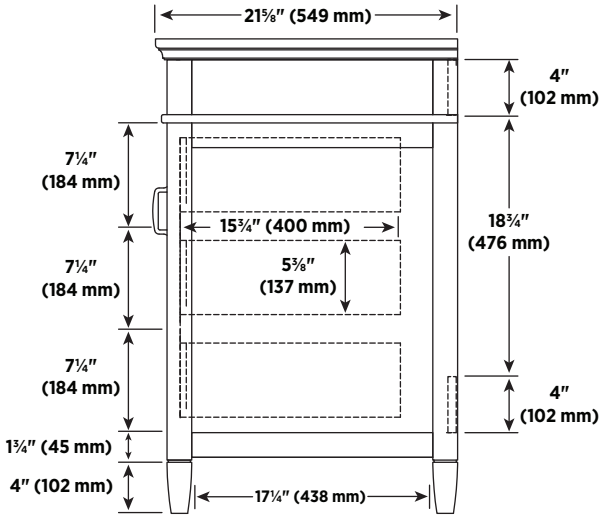

NOTES:
Important: Dimensions of product are nominal and may vary within the range of tolerances allowed. These measurements are subject to change or cancellation. No responsibility is assumed for use of superseded or voided pages.

CANADA: 5970 Chedworth Way, Unit B, Mississauga, Ontario L5R 4G5 **T:** (888) 256-7551 **F:** (905) 507-2006 www.foremostcanada.com